UNIVERSITY OF BIRMINGHAM | GRAVITATIONAL WAVE ASTRONOMY

OBSERVATIONAL COSMOLOGY

PATRICIA SCHMIDT

P.SCHMIDT@BHAM.AC.UK

RECAP

- Introduced the three spatial geometries compatible with the cosmological principle
  - Flat (Euclidean)
  - Spherical
  - Hyperbolic
    - Note: These spaces have a constant spatial curvature

- Distances are measured using the metric
  - The metric for an expanding universe is the FLRW metric

$$ds^2 = -c^2 dt^2 + a(t)^2 \left[dr^2 + S_\kappa^2(r)(d\theta^2 + \sin^2\theta d\phi^2) \right] \quad \text{with } S_\kappa(r) = \begin{cases} R_0 \sin(r/R_0) & (\kappa = +1)\ \text{Spherical} \\ r & (\kappa = 0)\quad \text{Euclidean} \\ R_0 \sinh(r/R_0) & (\kappa = -1)\ \text{Hyperbolic} \end{cases}$$

  - Shortest path between two events = geodesic

REDSHIFT VS EXPANSION IN GENERAL RELATIVITY

- Light travels along **null geodesics**, i.e. $ds^2 = 0$
- Let us consider a light ray travelling radially from a galaxy at comoving position r_1 to an observer $r_0 = 0$:

$$ds^2 = 0 \quad \Rightarrow \quad \pm\frac{cdt}{a(t)} = dr$$

- The first wave crest of the light ray is emitted at a time t_1 and received at t_0
- The second wave crest is emitted a short time interval later at $t_1 + \delta t_1$, which will be received at $t_0 + \delta t_0$
- Since the comoving positions remain the same, by assuming that $a(t + \delta t) \approx a(t)$, we find:

$$\delta t_0 = \frac{\delta t_1}{a(t_1)}$$

The time difference between 2 wave crests when emitted differs from the time difference when received!

- Since $\lambda = c\delta t$: $$\lambda_0 = \frac{\lambda_1}{a(t_1)}$$

As space expands, the wavelength of light is stretched - **cosmological redshift:**

$$\boxed{z := \frac{\lambda_0 - \lambda_1}{\lambda_1} \quad \Rightarrow \quad 1 + z = \frac{1}{a(t_1)}}$$

REDSHIFT VS EXPANSION IN GENERAL RELATIVITY

- The cosmological redshift is due to the expansion of the universe itself
- The change in redshift is directly proportional to the change in size of the universe

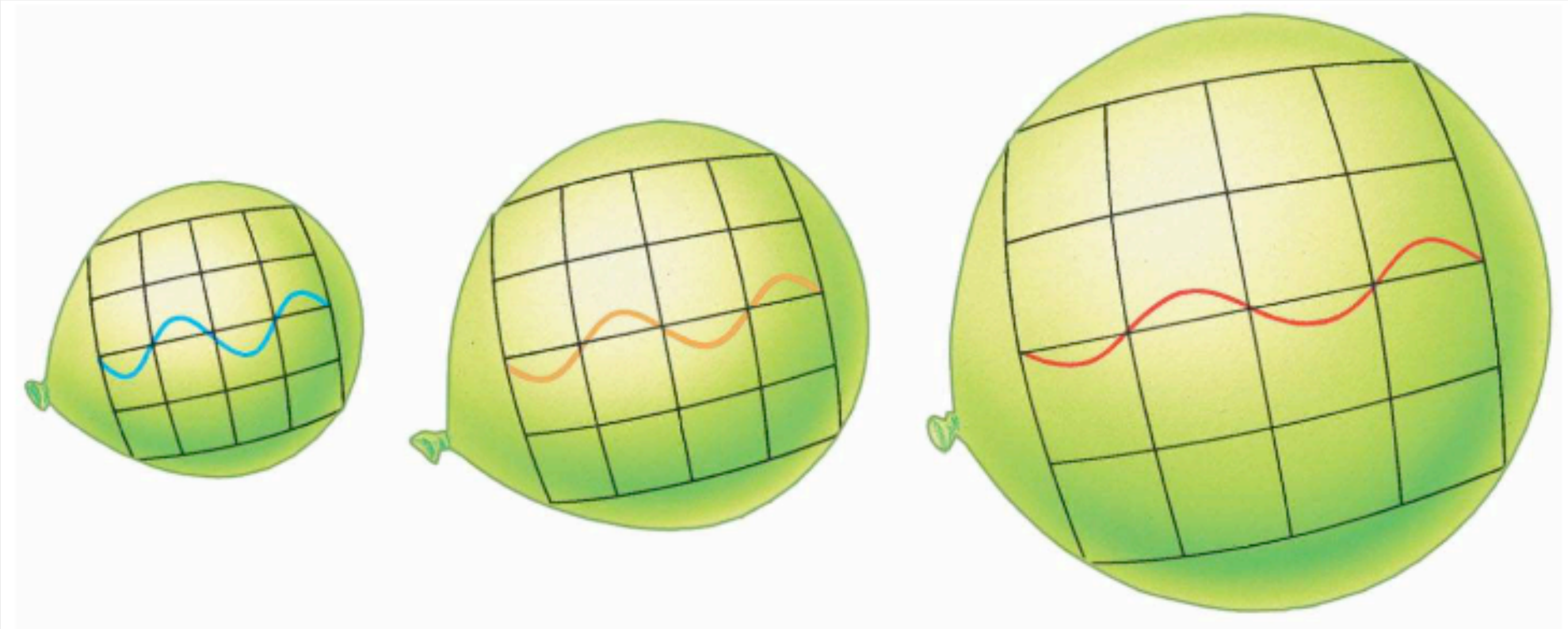

DISTANCES IN AN EXPANDING UNIVERSE

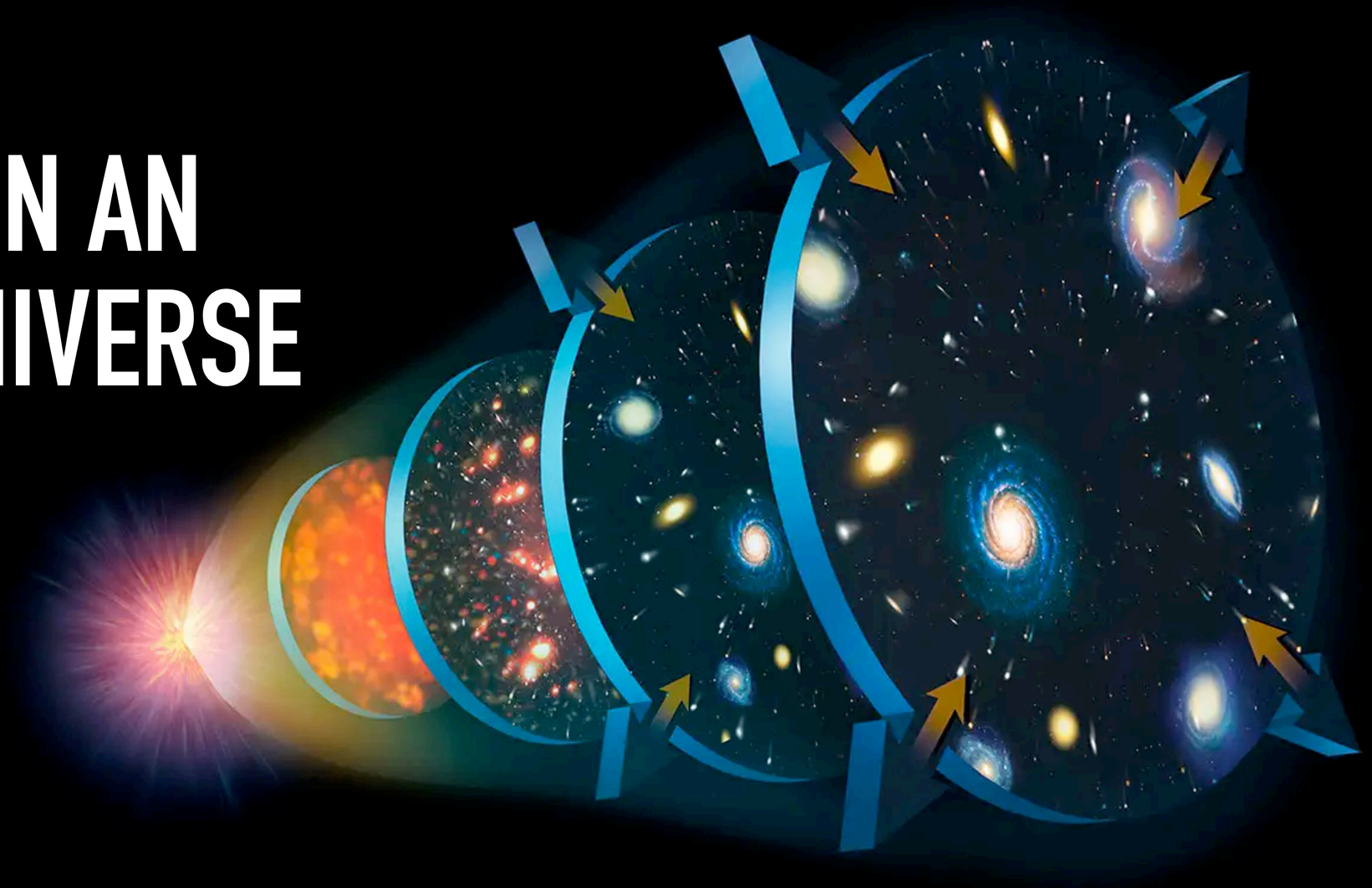

DISTANCE MEASURES WE ALREADY KNOW . . .

- (Radial) **comoving distance** = the fixed distance between two objects along the line-of-sight

- **Proper or physical distance** = the length of the spatial geodesic between two objects at a *fixed* cosmic time t:

$$d_p(t) = \int_0^{d_p(t)} ds = a(t) \int_0^r dr' = a(t) r$$

WHAT KIND OF DISTANCES DO WE MEASURE?

- Physical and comoving distances are not observed
- The universe expands a non-trivial amount while any light ray travels between two locations
- On Earth we normally just use a ruler, but for cosmological observations two types of distances are particularly useful: **luminosity distance** and **angular (diameter) distance**

Luminosity distance d_L

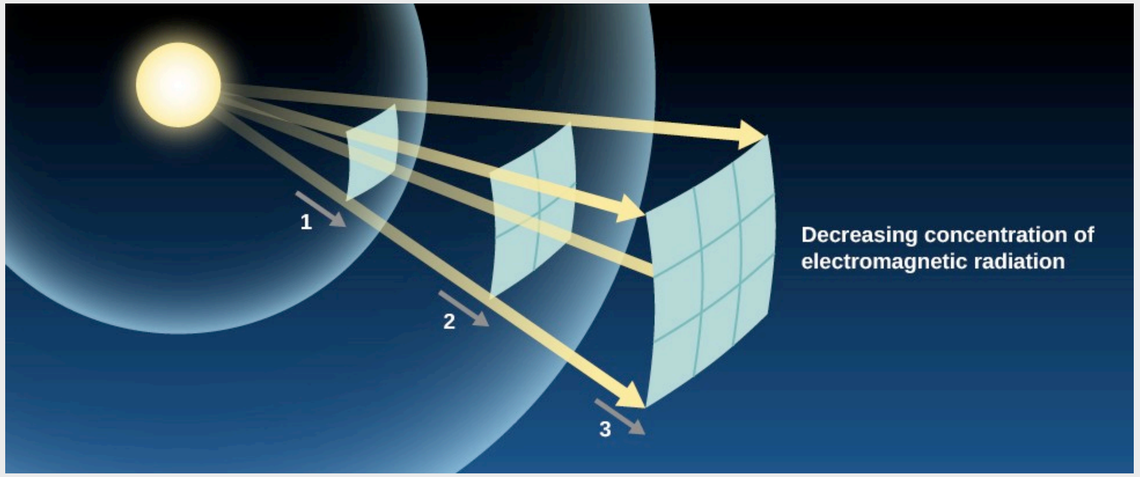

Angular diameter distance d_A

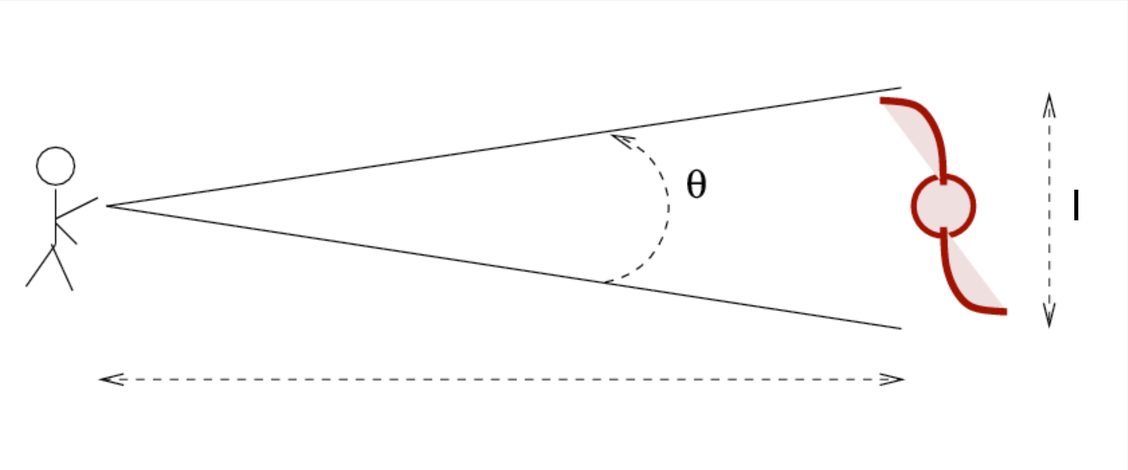

LUMINOSITY DISTANCE

- Assume an object, e.g. a star, with known intrinsic luminosity L
- We measure the flux F received from this object located at a distance d
- In static flat space, the observed flux is related to the luminosity by the **inverse square law**:

$$F = \frac{L}{4\pi d^2} \quad \Rightarrow \quad d_L \equiv \sqrt{\frac{L}{4\pi F}}$$

- This suggests a way that one can measure distances in the universe.
  - Caveat: One needs to know the luminosity of the object.

- Note: Few people think about the relationship between flux and luminosity as defining a distance but it does!

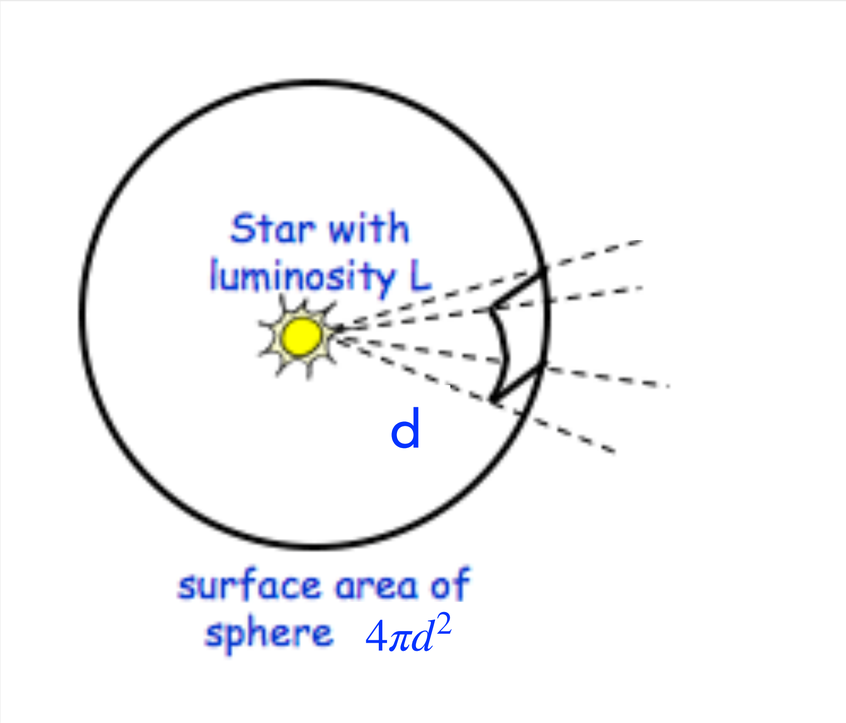

LUMINOSITY DISTANCE

- **What is the observed flux in an expanding FLRW universe?**
  - Photons emitted at a time t_e will spread over a sphere with proper radius $d_p(t_0) = a_0 r = r$

1. The proper surface area of this sphere is $A_p(t_0) = 4\pi S_\kappa(r)^2$
2. Photons are redshifted: $\lambda_0 = (1+z)\lambda_e$
3. The time interval between two consecutive photons increases: $\delta t_0 = (1+z)\delta t_e$

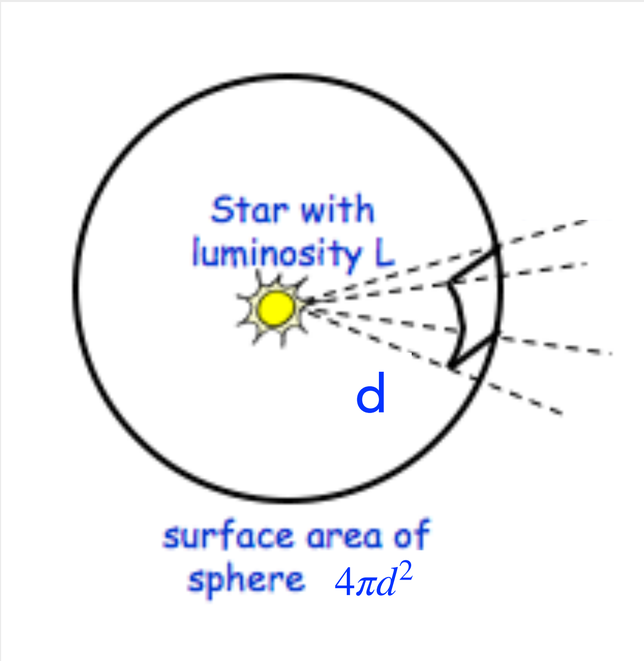

- Therefore, the observed flux from an object at comoving distance r is:

$$F = \frac{L}{4\pi S_\kappa^2(r)(1+z)^2}$$

- Comparing to the static, flat space result, we can define the **luminosity distance**:

$$\boxed{d_L = S_\kappa(r)(1+z)}$$

ANGULAR DIAMETER DISTANCE

- In static, flat space an object with a physical (transverse) size l, will span an angle θ that depends on the distance:

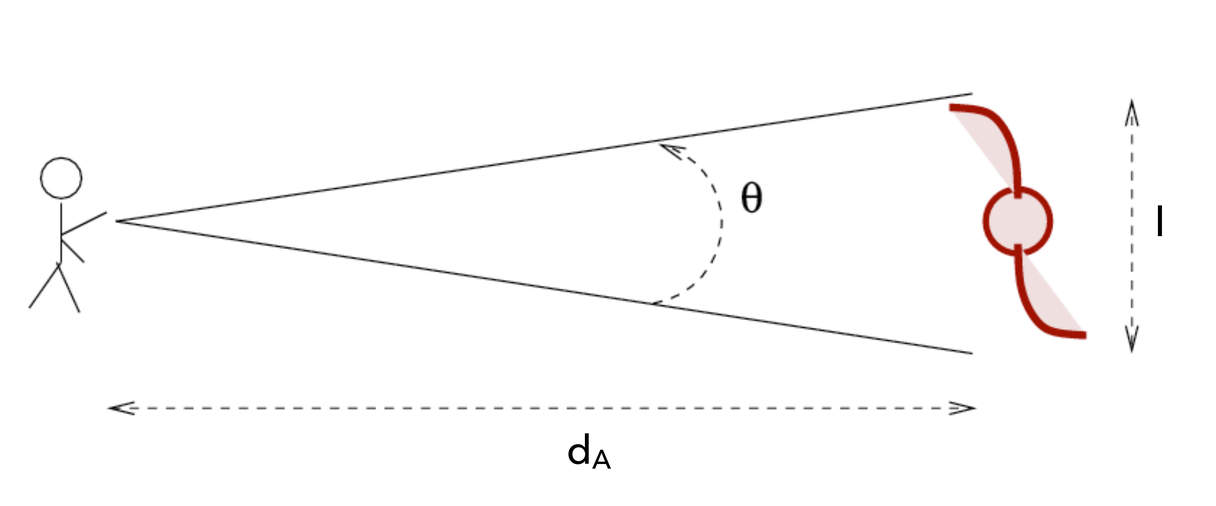

- We can define the angular (diameter) distance to be the relation between the size of an object and the subtended angle $\delta\theta$ (small angle approximation):

$$d_A \equiv \frac{l}{\delta\theta}$$

ANGULAR DIAMETER DISTANCE

- **What is the angular diameter distance in an expanding FLRW universe?**
  - The proper length/size of an object at the time the light was emitted is

$$\int_0^l ds = l = a(t_e) S_\kappa(r) \int_{\theta_1}^{\theta_2} d\theta = a(t_e) S_\kappa(r) \delta\theta = \frac{S_\kappa(r)\delta\theta}{(1+z)}$$

[Ryden, Fig. 6.3]

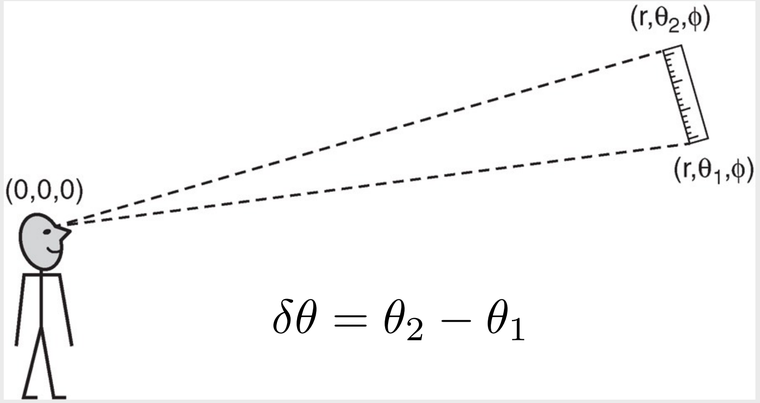

  - Comparing this to the definition in a flat, status universe, the angular diameter distance in an expanding FLRW universe is:

$$\boxed{d_A \equiv \frac{l}{\delta\theta} = \frac{S_\kappa(r)}{(1+z)}}$$

  - Note: Objects with a known proper length are referred to as *standard rulers*

SIZE OF THE OBSERVABLE UNIVERSE

- Cosmological models predict a time $t_{\rm BB} < t_0$ at which the scale factor vanishes, i.e., $a(t_{\rm BB}) = 0$
  - This "point" is referred to as the **Big Bang**

- Due to this "special time" and because c is finite, we can only see a finite distance into the past. The proper distance to the most distant objects is the **particle horizon distance.** It defines the size of the observable universe at a time t:

$$d_{\rm hor}(t) = c\,a(t)\int_0^t \frac{dt'}{a(t')} = c\,a(t)\eta(t)$$

  - Conformal time: $\eta = \int \frac{dt}{a(t)}$
  - The <u>current horizon distance</u> is:

$$d_{\rm hor}(t_0) = c\int_0^{t_0} \frac{dt}{a(t)}$$

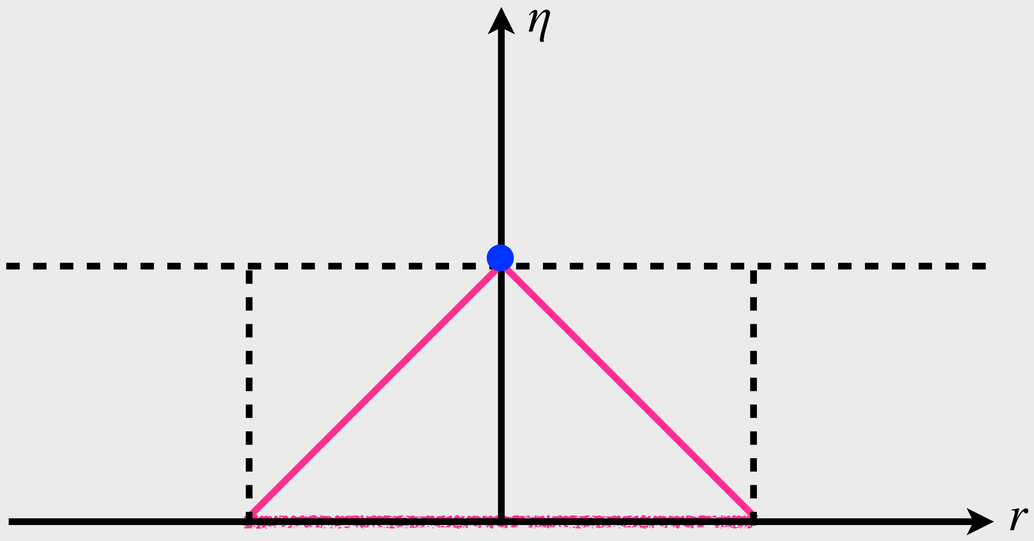

observable universe

- The **Hubble distance** is $d_H(t_0) \equiv c/H_0$